Fractional acoustic wave equations from mechanical and thermal constitutive equations

Sverre Holm

Outline

- 2 Perspectives
- Non-fractional wave equations
  - Low- and high-frequency regions
- Fractional viscoelastic models
  - Kelvin-Voigt
  - Zener
- Fractional heat flow model

2 Perspectives

1. Attenuation Power Laws
   - Wave Equations
2. Constitutive Equations

Physics or mathematics?

1. Power Laws: P- and S- loss, ω^y

- Similar power laws
- Longitudinal, pressure:
  - Granite: y ≈ 1
  - Liver: y ≈ 1.3
- Shear:
  - YIG: y=2
    (Yttrium indium garnet)
  - Granite: y ≈ 1

- Szabo and Wu, "A model for longitudinal and shear wave propagation in viscoelastic media", JASA (2000).

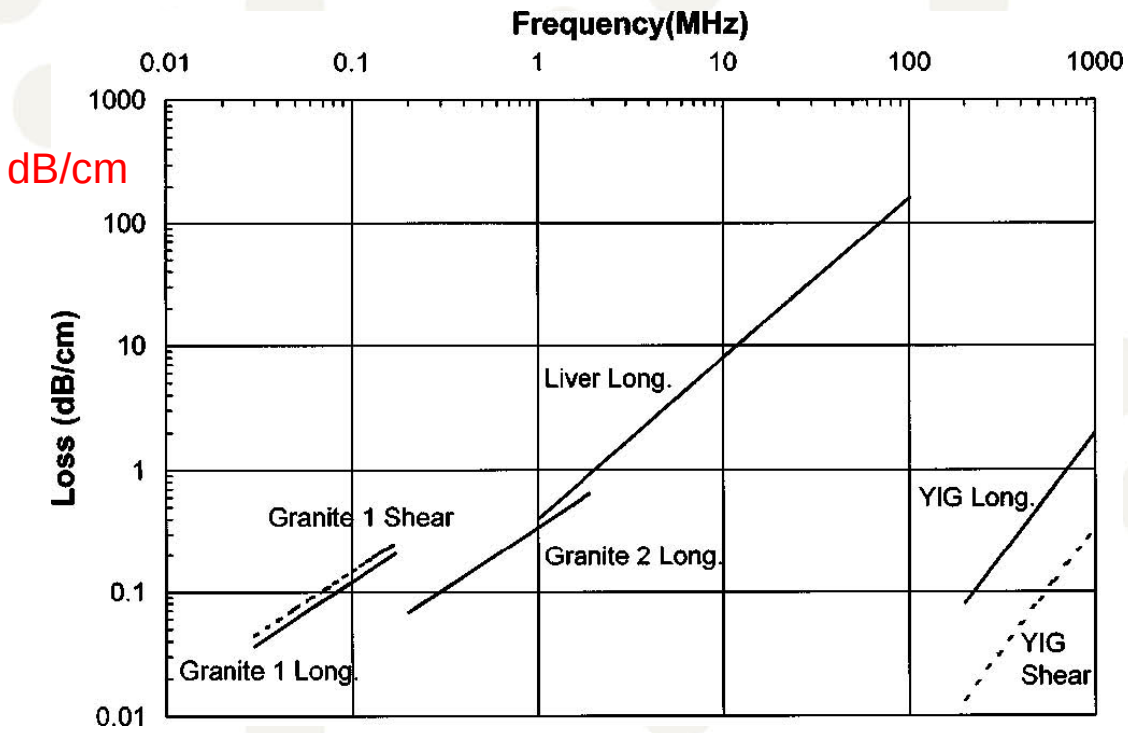

Data for shear and longitudinal wave loss which show power-law dependence over four decades of frequency.

1. Wave Equations with Power Law Solutions

$$\nabla^2 u - \frac{1}{c_0^2}\frac{\partial^2 u}{\partial t^2} + \tau \frac{\partial}{\partial t}(-\nabla^2)^{y/2} u = 0$$

$$\nabla^2 u - \frac{1}{c_0^2}\frac{\partial^2 u}{\partial t^2} + \tau \frac{\partial}{\partial t}(-\nabla^2)^{y/2} u + \eta(-\nabla^2)^{(y+1)/2} u = 0$$

$$\nabla^2 u - \frac{1}{c_0^2}\frac{\partial^2 u}{\partial t^2} - \frac{2\alpha_0}{\cos(\pi y/2)}\frac{\partial^{y+1} u}{\partial t^{y+1}} = 0$$

$$\nabla^2 u - \frac{1}{c_0^2}\frac{\partial^2 u}{\partial t^2} - \frac{2\alpha_0}{c_0 \cos(\pi y/2)}\frac{\partial^{y+1} u}{\partial t^{y+1}} - \frac{\alpha_0^2}{\cos^2(\pi y/2)}\frac{\partial^{2y} u}{\partial t^{2y}} = 0$$

1. Wave Equations with Power Law Solutions

$$\nabla^2 u - \frac{1}{c_0^2}\frac{\partial^2 u}{\partial t^2} + \tau_\sigma^\alpha \frac{\partial^\alpha}{\partial t^\alpha}\nabla^2 u = 0$$

$$\nabla^2 u - \frac{1}{c_0^2}\frac{\partial^2 u}{\partial t^2} + \tau_\sigma^\alpha \frac{\partial^\alpha}{\partial t^\alpha}\nabla^2 u - \frac{\tau_\epsilon^\alpha}{c_0^2}\frac{\partial^{\alpha+2} u}{\partial t^{\alpha+2}} = 0$$

$$\nabla^2 p - \frac{1}{c_0^2}\frac{\partial^2 p}{\partial t^2} + \tau_\sigma^\alpha \frac{\partial^\alpha}{\partial t^\alpha}\nabla^2 p + \tau_{th}^{2-\gamma}\frac{\partial^{2-\gamma}}{\partial t^{2-\gamma}}\nabla^2 p = -\frac{\beta_{NL}}{\rho_0 c_0^4}\frac{\partial^2 p^2}{\partial t^2}$$

3. Constitutive Equations

Non-fractional

$$\sigma(t) = E\left[\epsilon(t) + \tau_\sigma \frac{\partial \epsilon(t)}{\partial t}\right]$$

$$\sigma(t) + \tau_\epsilon \frac{\partial \sigma(t)}{\partial t} = E\left[\epsilon(t) + \tau_\sigma \frac{\partial \epsilon(t)}{\partial t}\right]$$

$$\mathbf{q} = -\kappa \nabla T$$

Fractional

$$\sigma(t) = E\left[\epsilon(t) + \tau_\sigma^\alpha \frac{\partial^\alpha \epsilon(t)}{\partial t^\alpha}\right]$$

$$\sigma(t) + \tau_\epsilon^\beta \frac{\partial^\beta \sigma(t)}{\partial t^\beta} = E\left[\epsilon(t) + \tau_\sigma^\alpha \frac{\partial^\alpha \epsilon(t)}{\partial t^\alpha}\right]$$

$$\mathbf{q}(t) = -\tau_{th}^{1-\gamma} \kappa \mathbf{I}^{\gamma-1} \nabla T(t)$$

Kelvin-Voigt constitutive equation

- Stress, σ vs strain ϵ

$$\sigma(t) = E\left[\epsilon(t) + \tau_\sigma \frac{\partial \epsilon(t)}{\partial t}\right]$$

  - E : elastic modulus
  - τ_σ : ratio of viscosity and elasticity – retardation time

- Hooke + Newton = spring + damper

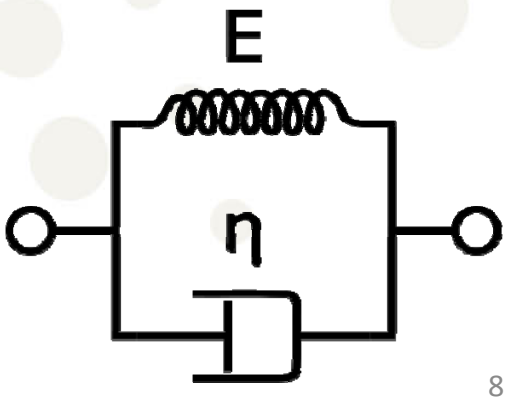

Viscous wave equation

1. Conservation of mass
2. Conservation of momentum
3. Kelvin-Voigt constitutive equation =>

$$\nabla^2 u - \frac{1}{c_0^2}\frac{\partial^2 u}{\partial t^2} + \tau_\sigma \frac{\partial}{\partial t}\nabla^2 u = 0$$

– Dispersion equation, insert displacement
*u = exp{i(ω*t *– kx)}*

$$k^2 - \omega^2/c_0^2 + \tau_\sigma i\omega k^2 = 0$$

Attenuation, phase/group velocity - 2 regions

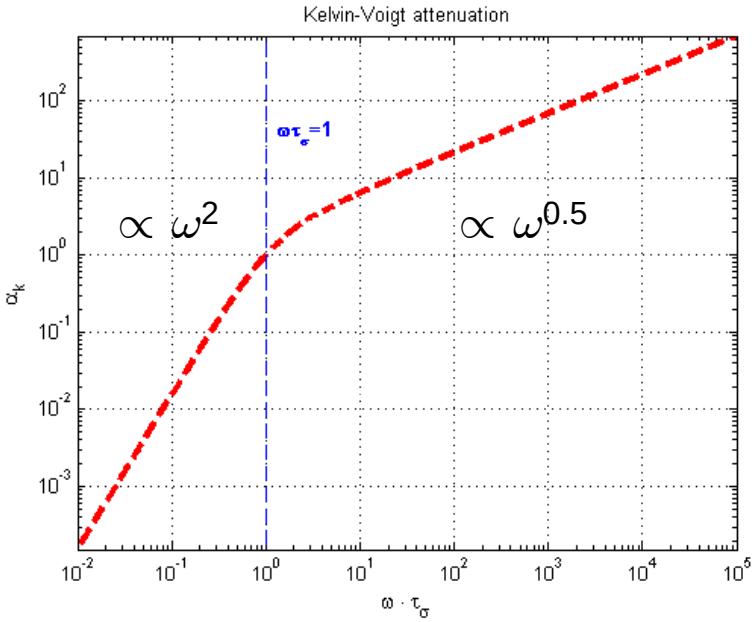

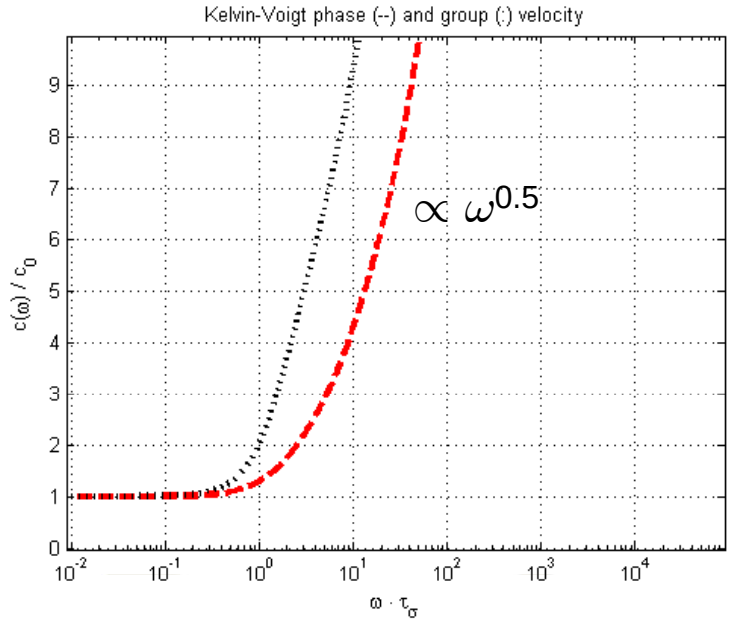

- Never a single power law
- Causal since constitutive equation was causal

Application dependent cut-off

- Low frequency region:
  - Pressure waves in water, $\tau_\sigma \approx 1$ ns
  - $\omega\tau_\sigma << 1$ for frequencies less than about 1 GHz
  - Application : Sonar (1. order model for water)
- High frequency region:
  - Shear waves in human tissue, $\tau_\sigma \approx 0.1$ sec
  - $\omega\tau_\sigma >> 1$ for frequencies larger than about 10 Hz
  - Application: Elastography

Losses in a fluid

$$\nabla^2 p - \frac{1}{c_0^2}\frac{\partial^2 p}{\partial t^2} + \frac{\delta}{c_0^4}\frac{\partial^3 p}{\partial t^3} = 0$$

- Loss: $\delta = \delta_{me} + \delta_{th} = \frac{1}{\rho_0}\left(\zeta + \frac{4}{3}\eta\right) + \frac{\kappa}{\rho_0}\left(\frac{1}{c_v} - \frac{1}{c_p}\right)$
- Mechanical:
  - η , ζ - shear and bulk viscosity coefficients
- Thermal:
  - κ - thermal conductivity
  - c_v , c_p - heat capacity per unit of mass at constant volume / pressure.
- Loss terms are additive, but only for low frequencies, Bhatia, Ultrasonic absorption, 1967 (ch. 4.5)

Fractional Kelvin-Voigt

- Stress, σ vs strain ϵ - Fractional Kelvin-Voigt

$$\sigma(t) = E\left[\epsilon(t) + \tau_\sigma^\alpha \frac{\partial^\alpha \epsilon(t)}{\partial t^\alpha}\right]$$

  - M. Caputo, "Linear models of dissipation whose Q is almost frequency independent–II", Geophys. J. Roy. Astr. S. 1967
  - Y. Rossikhin and M. Shitikova, "Applications of fractional calculus to dynamic problems of linear and nonlinear hereditary mechanics of solids", Appl. Mech. Rev., 1997

– α=1 is normal viscoelastic case (figure)

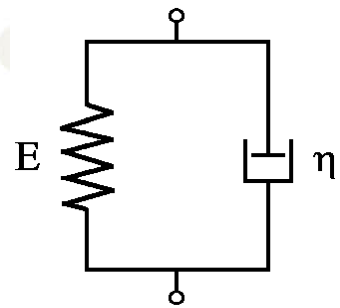

A physical fractional device

- Capacitor soakage, dielectric absorption
- $i = Cd^a u/dt^a, \ a \lessapprox 1$
- $Z = u/i = 1/C(j\omega)^a$
- Example in video:
  - 220 uF/63 Volt
  - 10 Volts for 60 sec
  - Shorted for 6 sec
  - http://www.youtube.com/watch?v=vhHog_yCQ4Q

Wave equation from fractional K-V

Fractional loss operator

- Conservation laws =>

$$\nabla^2 u - \frac{1}{c_0^2}\frac{\partial^2 u}{\partial t^2} + \tau_\sigma^\alpha \frac{\partial^\alpha}{\partial t^\alpha}\nabla^2 u = 0$$

  – M. Caputo, "Linear models of dissipation whose Q is almost frequency independent–II", Geophys. J. Roy. Astr. S. 1967

  – Dispersion equation, *u = exp{i(ω*t *– kx)}*
    - imaginary part of k is loss: $k^2 - \omega^2/c_0^2 + (\tau_\sigma i\omega)^\alpha k^2 = 0.$
    - Holm & Sinkus, "A unifying fractional wave equation for compressional and shear waves," JASA, 2010.

Attenuation, fractional Kelvin-Voigt

y = α+1 y = 1-α/2

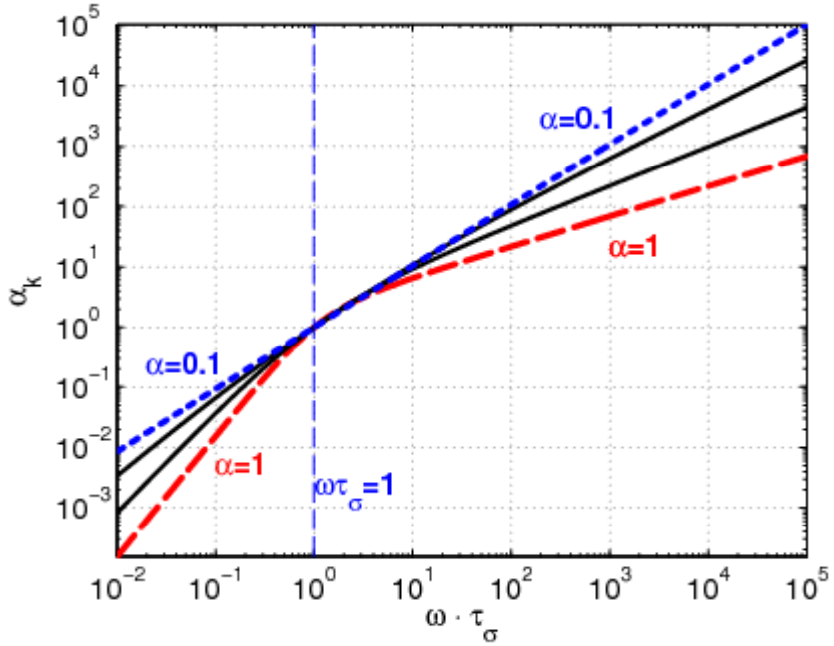

Elastography shear waves, $\omega\,\tau$ >> 1 0/0.5<y<1

Ultrasound compression waves $\omega\,\tau$ << 1, 1<y<2

α = 0.1, 0.3, 0.7, and 1

α = 1: viscoelastic case

Attenuation, fractional Zener

y = α+1, y = 1-α/2, y = 1-α

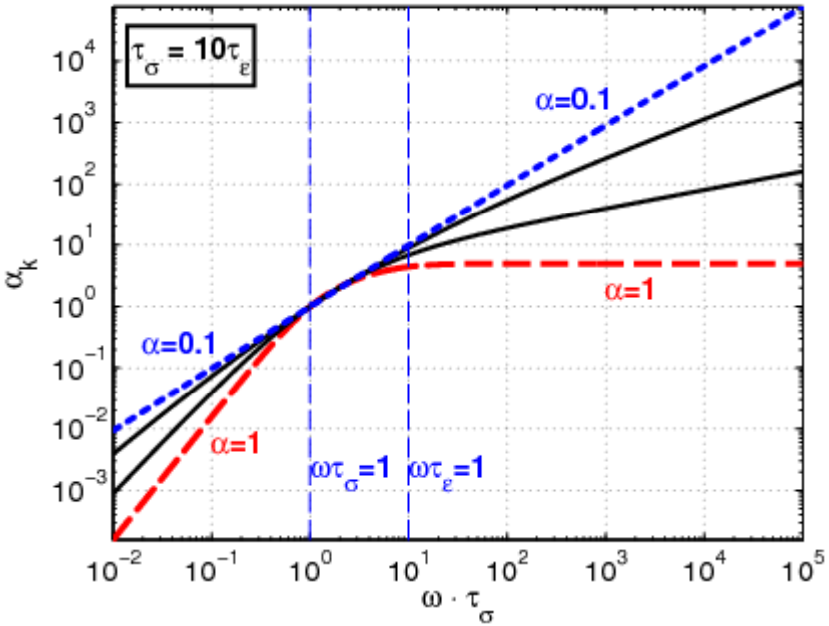

y = α+1, y = 1-α/2, y = 1-α

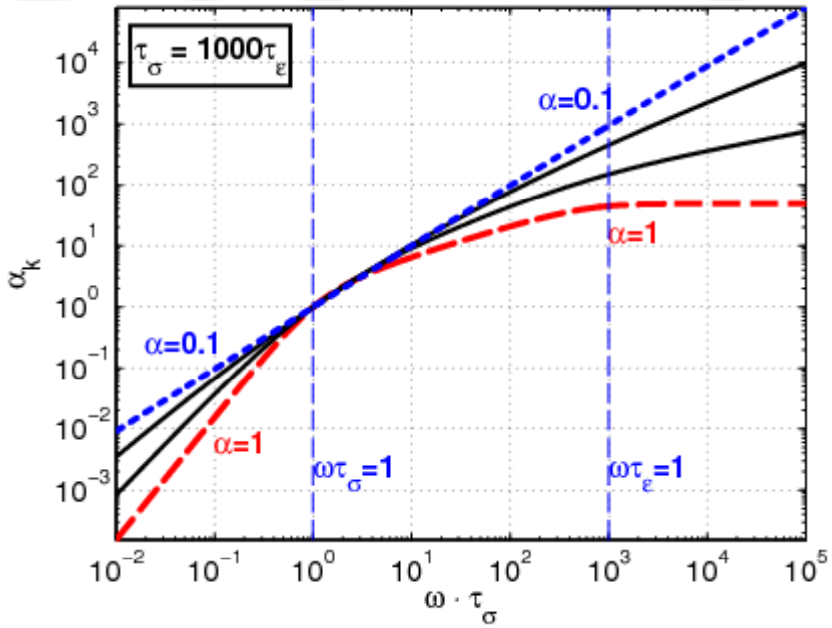

1. Low frequency
2. Medium frequency = High frequency for Kelvin-Voigt model
3. High frequency

$\alpha = \beta$ = 0.1, 0.3, 0.7, and 1

MR Elastography, brain

- Experimental and model wave speed and damping

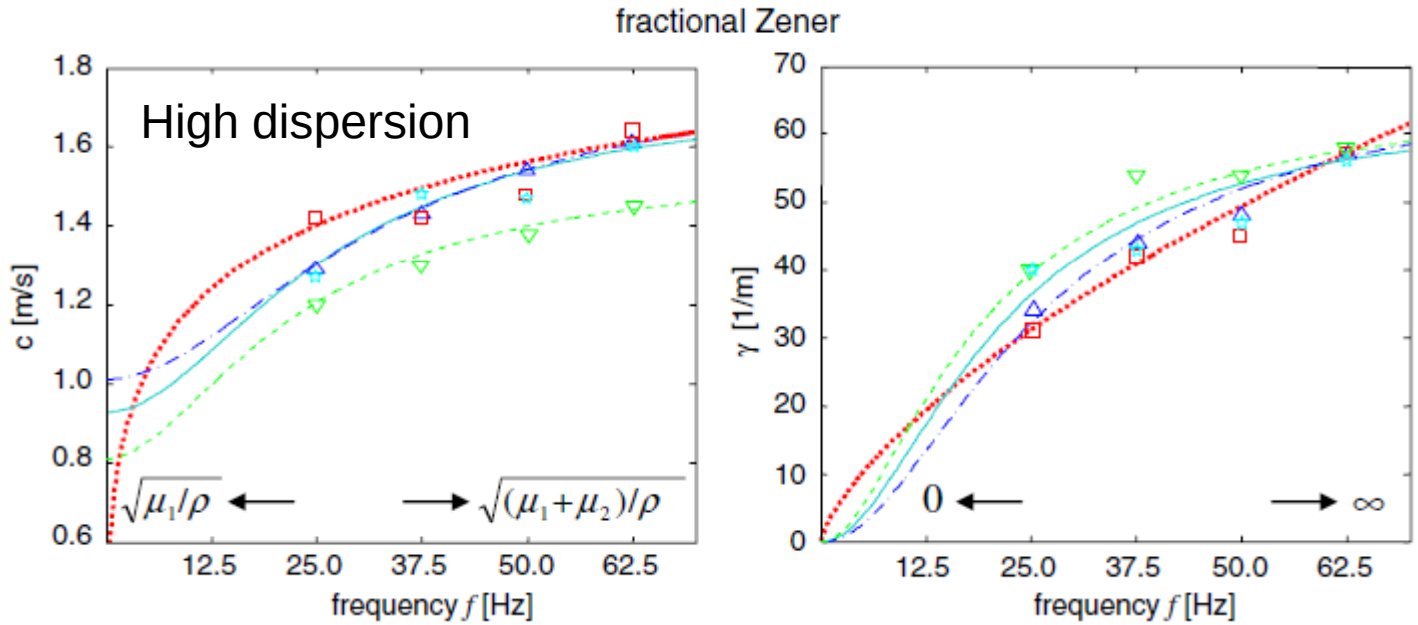

- Klatt et al, Noninvasive assessment of the rheological behavior of human organs using multifrequency MR elastography: a study of brain and liver viscoelasticity, Phys. Med. Biol 2007

Modifying Fourier's heat law

- Gurtin & Pipkin (Arch. Ration. Mech. Anal 1968):
  - From $$\mathbf{q} = -\kappa \nabla \mathbf{T}$$
  - To $$\mathbf{q}(\mathbf{t}) = -\int_{-\infty}^{\mathbf{t}} \mathbf{K}(\mathbf{t}-\tau)\nabla \mathbf{T}(\tau)\mathbf{d}\tau.$$

Fractional Fourier law

- Power law memory kernel ($1 < \gamma \leq 2$):

$$K(t-\tau) = \frac{\chi}{\Gamma(\gamma-1)}(t-\tau)^{\gamma-2}$$

- Gives fractional Fourier law (fract. integral)

$$\mathbf{q(t)} = -\chi \mathbf{I}^{\gamma-1} \nabla \mathbf{T(t)}$$

  - Povstenko, Int. J. Solids Struct., 2007

  - $\gamma \rightarrow 1 \Rightarrow$ standard Fourier law (kernel $\rightarrow$ impulse)

- Fractional diffusion: $\frac{1}{\alpha}\frac{\partial^\gamma T}{\partial^\gamma t} = \nabla^2 T$

Fract. Kelvin-Voigt + Fourier law:

- Fract. Westervelt eq of 1. form, decoupled:

$$\nabla^2 u - \frac{1}{c_0^2}\frac{\partial^2 u}{\partial t^2} + \frac{\delta_{me}}{c_0^2}\frac{\partial^\alpha}{\partial t^\alpha}\nabla^2 u + \frac{\delta_{th}}{c_0^2}\frac{\partial^{2-\gamma}}{\partial t^{2-\gamma}}\nabla^2 u = -\frac{\beta}{\rho_0 c_0^4}\frac{\partial^2 p^2}{\partial t^2}$$

$$\delta_{me} = \frac{\tau^{\alpha-1}}{\rho_0}\left(\zeta + \frac{4}{3}\eta\right) \qquad \delta_{th} = \frac{\kappa \tau_{th}^{1-\gamma}}{\rho_0}\left(\frac{1}{c_v} - \frac{1}{c_p}\right)$$

- Fract. Westervelt of 2. form, coupled γ=2-α:

$$\nabla^2 u - \frac{1}{c_0^2}\frac{\partial^2 u}{\partial t^2} + \left(\frac{\delta_{me}}{c_0^2} + \frac{\delta_{th}}{c_0^2}\right)\frac{\partial^\alpha}{\partial t^\alpha}\nabla^2 u = -\frac{\beta}{\rho_0 c_0^4}\frac{\partial^2 p^2}{\partial t^2}$$

- Standard Westervelt equation for γ=α=1

Conclusion

- The constitutive equation, a material property, is what determines wave behavior
- Both the low and high-frequency regions are important
- Which one which is relevant depends on application

Fractional viscoelastic wave equations

- Fractional mechanical models:
  - Fract. Kelvin-Voigt: $$\nabla^2 u - \frac{1}{c_0^2}\frac{\partial^2 u}{\partial t^2} + \tau_\sigma^\alpha \frac{\partial^\alpha}{\partial t^\alpha}\nabla^2 u = 0$$
  - Fract. Zener: $$\nabla^2 u - \frac{1}{c_0^2}\frac{\partial^2 u}{\partial t^2} + \tau_\sigma^\alpha \frac{\partial^\alpha}{\partial t^\alpha}\nabla^2 u - \frac{\tau_\epsilon^\beta}{c_0^2}\frac{\partial^{\beta+2} u}{\partial t^{\beta+2}} = 0$$
  - Attenuation $\propto \omega^y$
    - Low frequencies: y = 1+α
    - High/Intermediate frequencies: y = 1-α/2
    - High frequencies (for Zener): y= 1-α